Short Form Data Sheet

W-Series TEMPERATURE

BETA products are manufactured in The Netherlands

Enclosures:

Cast Aluminum:
Oven baked powder coating
hammertone grey

Also available in SS 316

Wheaterproof IP 66 - EN 60529

(Nema 4X)

Repeatablity:
typical 0.2% of Full Scale

Standard unit:
Degrees Celsius

Optional: Fahrenheit

Standard process connetion:
1/2" NPT M

Standard Buld Diameter:
10 mm

For wetted parts:
more possibilities available, see full catalogue

BETA SWITCHES ARE, BUILD TO LAST!

Do you want to know more:

Please contact your local dealer and ask for the General Bulletin. Or contact us directly!

www.beta-b.nl

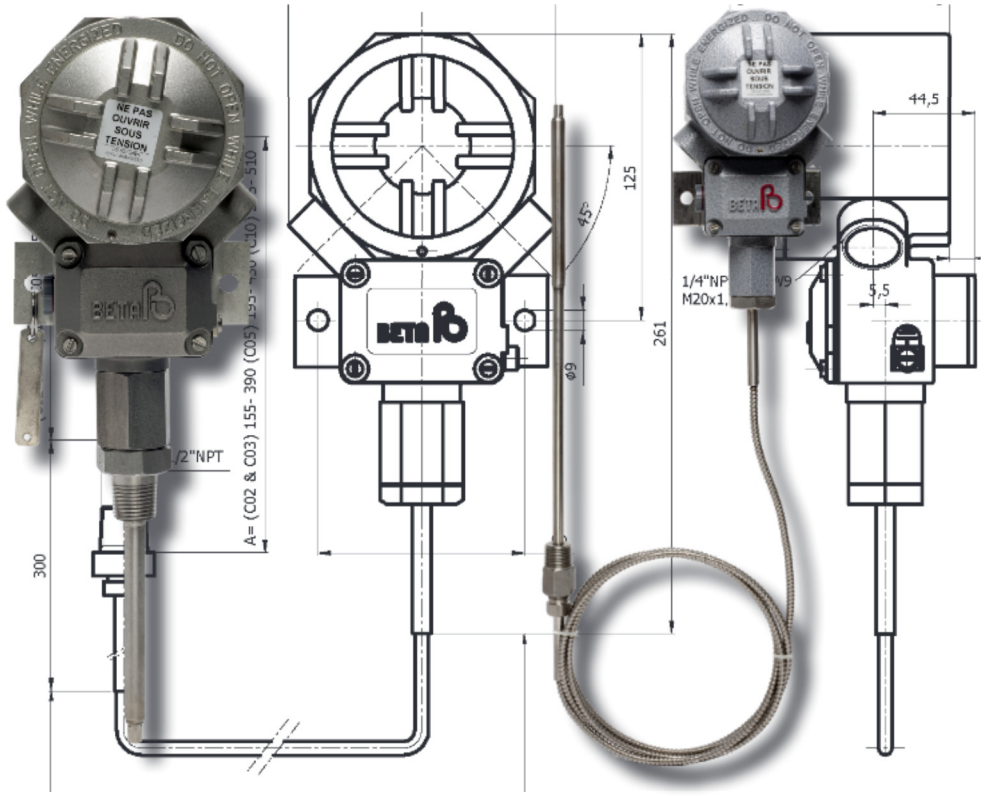

Ranges for Temperature swiches

RANGE CODE	ADJUSTABLE RANGE		MAX. DEADBAND [3]		MAX. TEMPERATURE		PROOF TEMPERATURE		MAX. PROCESS PRESSURE
T 528 H	-40 / +40	°C	3	°C	+125	°C	+200	°C	175 bar
T 548 H	0 / +95	°C			+200	°C	+250	°C	
T 568 H[1]	+60 / +180	°C			+300	°C	+350	°C	
T 588 H[2]	+160 / +300	°C	3.5	°C	+400	°C	+450	°C	

[1] In case process temperature > 140 °C, Direct mount sensing bulb is not recommended.

[2] Not in combination with Direct mount sensing bulb.

[3] For deadband calculation in combination with "SR"- and "SP"- micro, Consult Factory.

Disclaimer: We reserve the right to make changes or modify the contents of this document without pior notice. BETA B.V. does not accept any liability or claim whatsoever for potential errors, incorrect interpretation or possible lack of information in this document. It is clearly and only intended as coarse and general information of our products.

More Short Form Data Sheets on Vacuum, Differential and Temperature Switches are available.

Doc. no.: SP 404/13/07/5K-(FC)

Short Form Data Sheet

W-Series TEMPERATURE

BETA PRESSURE & TEMPERATURE SWITCHES

Making the modelcode: Follow steps 1 to 5

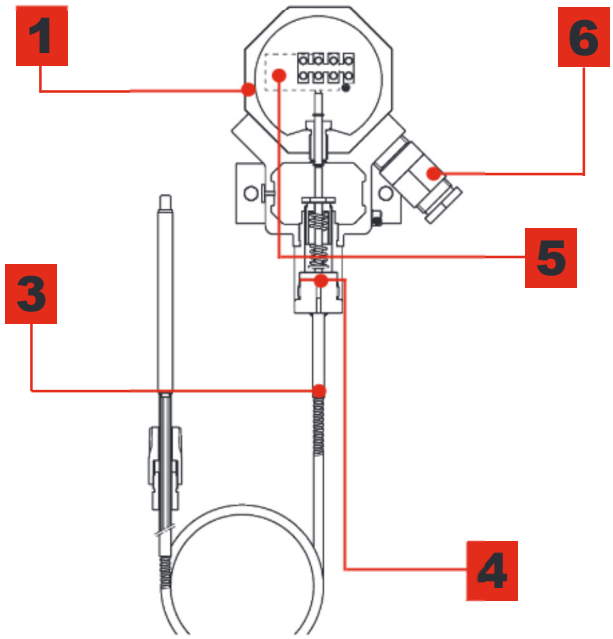

1 Selection of enclosure type.

Conduit	Material	Enclosure code
3/4" NPT F	Aluminium	W3
M20x1.5	SS 316	W8
3/4" NPT F	SS 316	W9

2 Selection of range code, see front page

3 Selection of process connection.

Process Connection	Code	Type of temperature sensing bulb	
1/2" NPT (M)	D00	Direct mount	128 mm length
	D02	Direct mount	225 mm length
	C02	Capillary mount	2 m. cappilary length
	C05	Capillary mount	5 m. cappilary length
	C10	Capillary mount	10 m. cappilary length
	CXX	Capillary mount	Special cappilary length

Note: All SS 316 stainless steel sensor, capillary (SS 304 armored) and compression fitting.

[1]) Not in combination with range T588H (+160/+300 °C), not recommended with T568H in case of process temperature >140 °C.

[2]) Length of capillary should be specified, consult your BETA Switch Representative. (Max 15 m.)

4 Selection of wetted parts

All temperature switches have "S0" welded diaphragm.

5 Selection of microswitches

Rating VAC.	Rating VDC. 3)	Use:	Switch Code: 1)
480/ 15A	28/ 0.5A	Standard	K1 2)
480/ 10A	28/ 0.5A	Standaard for L-serie	L1 2)
480/ 15A	125/ 0.5A	Normal DC-service	U1
125/ 1A	28/ 0.5A	For use in H_2S environment and/or for (EEx)i applications. 3)	G1 **
250/ 0.1A	30/ 0.1A		Y1 1)
250/ 0.1A	30/ 0.1A	Environmental proof(IP 67)	O1 1)
250/ 2A	30/ 2A		N1 1)

1) For D.P.D.T action, second code figure schould be specifeid as **"2"**
For example: Y1 = S.P.D.T./ **Y2** = D.P.D.T

2) VDE certified acc. to DIN EN 61 058-1:1992+A1:1993.

3) Indicated ratings are for resistive DC load only.

** DC Rating not U.L. listed, although experience and third party testing confirm the D.C Voltage ratings. Consult your local BETA switch Representative.

6 Selection of options

Description	Option code
Cable gland	C
Stainless steel tag key ringed to enclosure (Tag has 2 lines - 16 charaters per line)	S
Epoxy coating of switch. (External) Only in combination SS 316 process connection	Y

Accessoires:

Thermowell (SS 316)

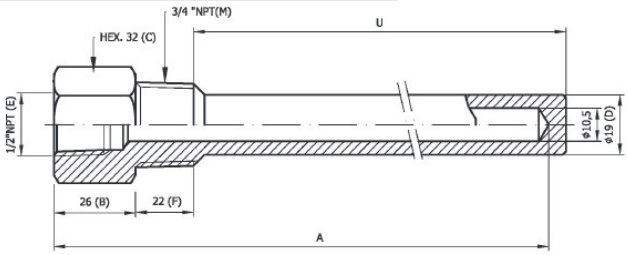

Standard BETA Thermowell

CODE	INSERTION LENGTH U (MM)	INSERTION ELEMENT LENGHT A (MM)	FIT TO BETA TEMP. SENSING BULB
TW 11	115	155	D00, C02, C03
TW 15	155	195	C02, C03, C05
TW 19	190	228	D02, C02, C03, C05

NOTES:
1. BETA Thermowells to be ordered as separate item. Do not include Thermowell code into the switch code.
2. Special Thermowell possible. Consult your BETA Switch Representive.

For extended selection and/ or specified technical information, please ask for the "BETA User Friendly" Catalogue.

Doc. no.: SP 414/13/07/5K-(FC)