PELTIER CLIMATIC CHAMBERS

PKK-50 (+ 8 °C ...+ 55 °C)

PKK-125 (+ 10 °C ...+ 50 °C)

Solely Peltier based temperature and humidity control:

- Stable, silent, vibration free climatic conditions
- Keeping superior temperature & Rh stability
- Convenient– Side Access for Cables & Probes
- Cascade PID control

Kambic d.o.o. Metliska cesta 16; 8333 Semic ; Slovenia - EU
www.kambicmetrology.com
info@kambicmetrology.com

Kambič

Kambic d.o.o. Metliska cesta 16; 8333 Semic ; Slovenia - EU
www.kambicmetrology.com
info@kambicmetrology.com

User interface:

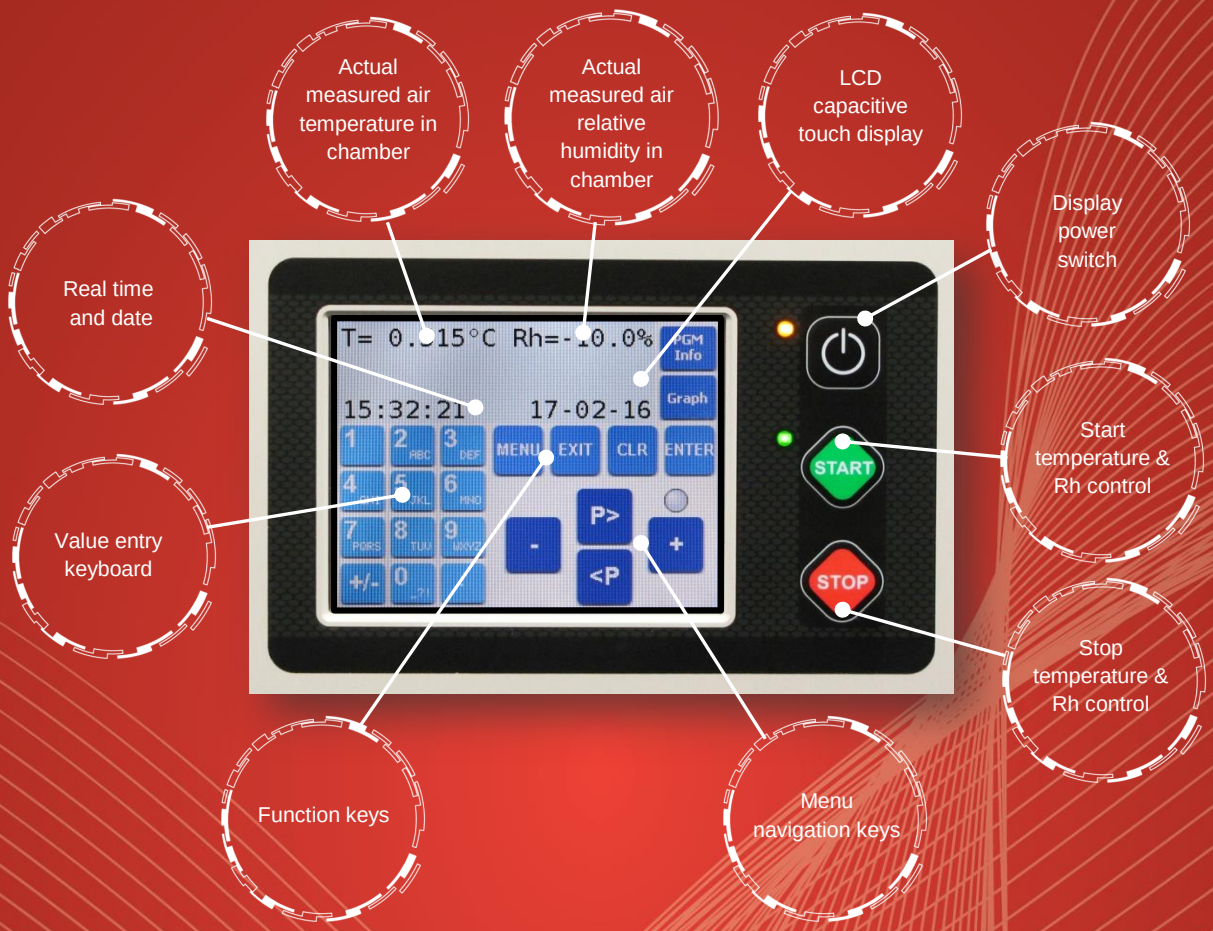

Chamber temperature & Rh stability at + 35 °C and 85 % Rh:

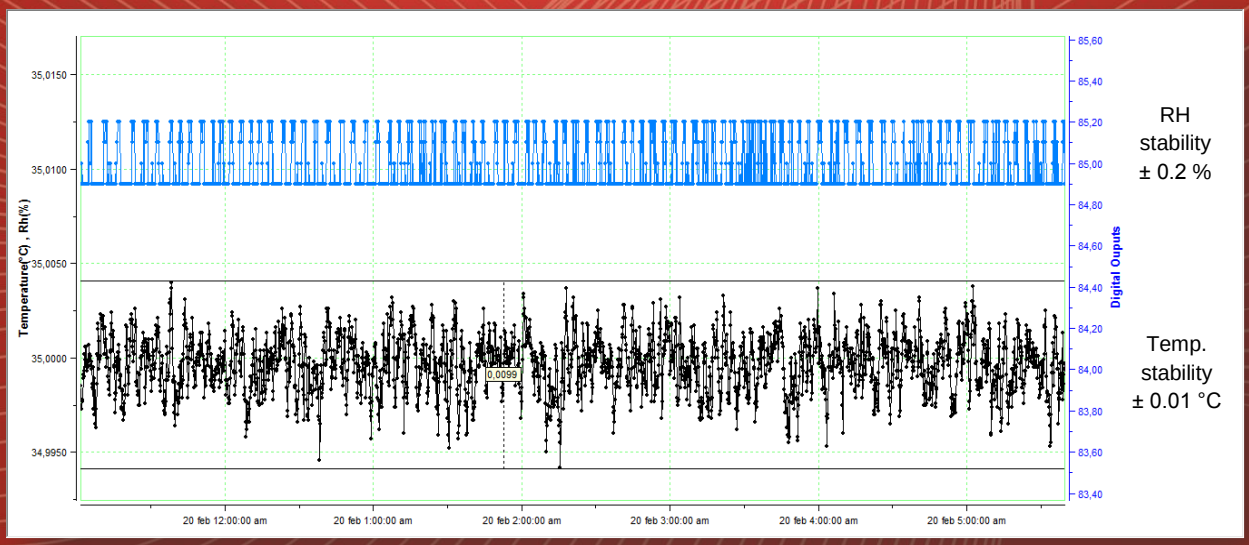

Kambic d.o.o. Metliska cesta 16; 8333 Semic ; Slovenia - EU
www.kambicmetrology.com
info@kambicmetrology.com

Controller functions:

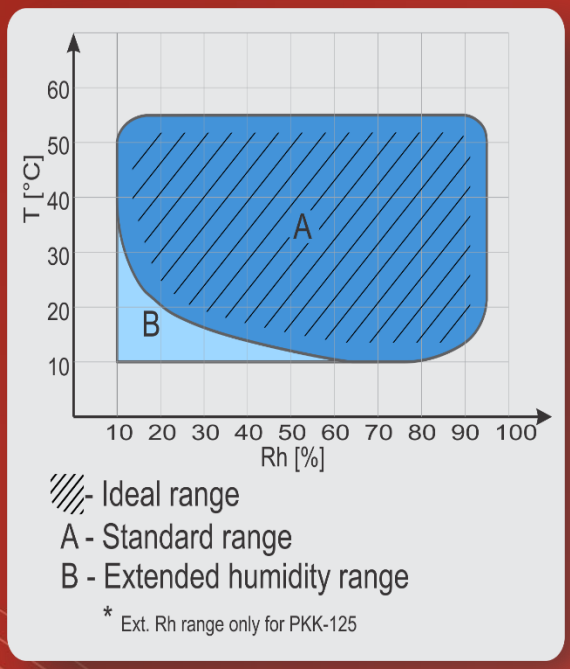

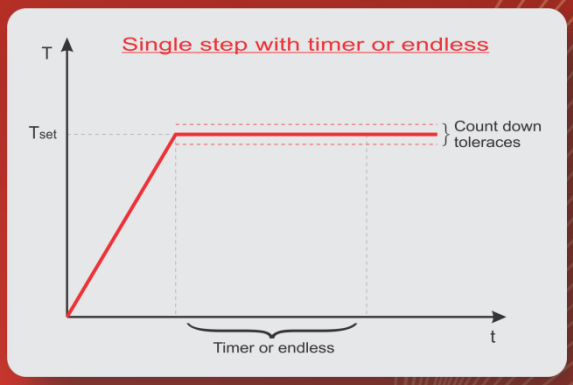

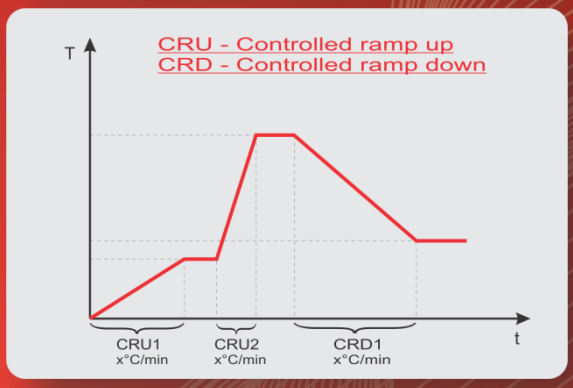

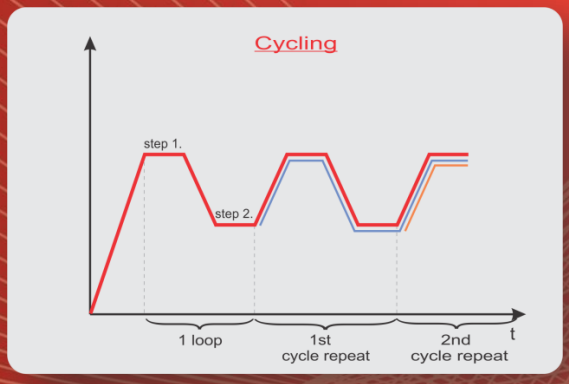

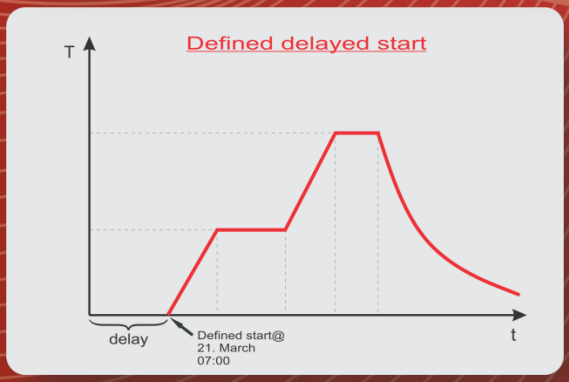

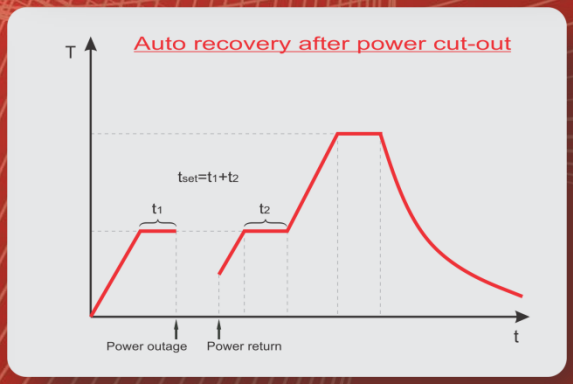

Kambic d.o.o. Metliska cesta 16; 8333 Semic ; Slovenia - EU
www.kambicmetrology.com
info@kambicmetrology.com

Technical data:

	PKK-50	PKK-125
External dimensions (WxHxD) (mm)	570 x 800 x 660	670 x 1135 x 755
Internal dimensions (WxHxD) (mm)	400 x 400 x 360	500 x 500 x 500
Volume (L)	~ 57	~ 125
Temperature range (°C)	+ 8 …+ 55	+ 10…+ 50
Temperature display resolution (°C)	0.001	0.001
Temperature set resolution (°C)	0.1	0.1
Temperature stability (°C)	± 0.06 @ + 15 °C, 75 % Rh ± 0.04 @ + 20 °C, 60 % Rh ± 0.03 @ + 30 °C, 65 % Rh ± 0.06 @ + 50 °C, 75 % Rh ± 0.12 @ + 50 °C, 15 % Rh	± 0.08 @ + 15 °C, 75 % Rh ± 0.05 @ + 20 °C, 60 % Rh ± 0.05 @ + 30 °C, 65 % Rh ± 0.10 @ + 50 °C, 75 % Rh ± 0.10 @ + 50 °C, 15 % Rh
Temperature uniformity (°C)	± 0.25 @ + 15 °C, 75 % Rh ± 0.25 @ + 20 °C, 60 % Rh ± 0.48 @ + 30 °C, 65 % Rh ± 0.58 @ + 50 °C, 75 % Rh ± 1.30 @ + 50 °C, 15 % Rh	± 0.30 @ + 15 °C, 75 % Rh ± 0.25 @ + 20 °C, 60 % Rh ± 0.50 @ + 30 °C, 65 % Rh ± 0.60 @ + 50 °C, 75 % Rh ± 1.30 @ + 50 °C, 15 % Rh
Relative humidity range (%)	10…95	10…95
Relative humidity display resolution (%)	0.1	0.1
Relative humidity set resolution (%)	0.1	0.1
Relative humidity stability (%)	±0.3 @ + 15 °C, 75 % Rh ±0.3 @ + 20 °C, 60 % Rh ±0.3 @ + 30 °C, 65 % Rh ±0.3 @ + 50 °C, 75 % Rh ±0.3 @ + 50 °C, 15 % Rh	± 0.3 @ + 15 °C, 75 % Rh ± 0.3 @ + 20 °C, 60 % Rh ± 0.3 @ + 30 °C, 65 % Rh ± 0.3 @ + 50 °C, 75 % Rh ± 0.3 @ + 50 °C, 15 % Rh
Temperature control	PID	PID
Relative humidity control	Dew point humidity control	Dew point humidity control (dry air purge for extended Rh optional)
Power supply	230 V 50/60 Hz	230 V 50/60 Hz
Wattage (W)	500	500
Interface	RS 232 (USB or Ethernet as option)	RS 232 (USB or Ethernet as option)
Shelve	1 (max 4)	1 (max 6)
Shelve capacity (kg)	15	20
Max capacity (kg)	30	50
Access port (mm)	Ø 40 standard, Ø 50, Ø 90 (accessory)	Ø 40 standard, Ø 50, Ø 90 (accessory)
Noise (dBA) @ 1 m distance	< 50	< 50
Weight (kg)	~ 36	~ 75

Kambic d.o.o. Metliska cesta 16; 8333 Semic ; Slovenia - EU
www.kambicmetrology.com
info@kambicmetrology.com

Ordering information and accessories:

Description	Part no.
Peltier climatic chamber PKK-50	2552
Peltier climatic chamber PKK-125	2607
USB interface	1466
Ethernet interface	1716
Shelve PKK-50	2553
Shelve PKK-125	2608
Access Port w. Plug Ø 40 mm right	2629
Access Port w. Plug Ø 50 mm right	608
Access Port w. Plug Ø 90 mm right	1731
Observation window with illumination	252
PKK-Tool (Software Monitoring & History)	1663
Password protection	1718
Evaluation report	1719
Trolley for PKK-50	2609
Trolley for PKK-125	2610
Extended Rh range via dry air purge (only for PKK-125)	1758

*All performance in controlled environment (Tambient = 22 °C ± 3 °C)!
*Accessories might affect performance!

Kambic d.o.o. Metliska cesta 16; 8333 Semic ; Slovenia - EU
www.kambicmetrology.com
info@kambicmetrology.com

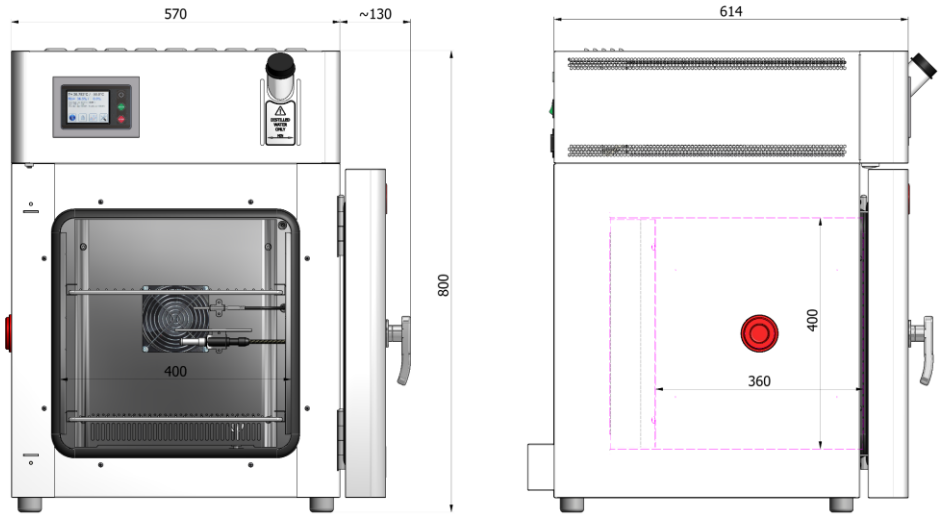

SHIPPING	
W	695 mm
H	1010 mm
D	785 mm
WEIGHT	108 kg

* we reserve the right to modifications

DIMENSIONAL DRAWING	PRODUCT	MODEL
	PELTIER CLIMATIC CHAMBER	PKK-50
		/
		/

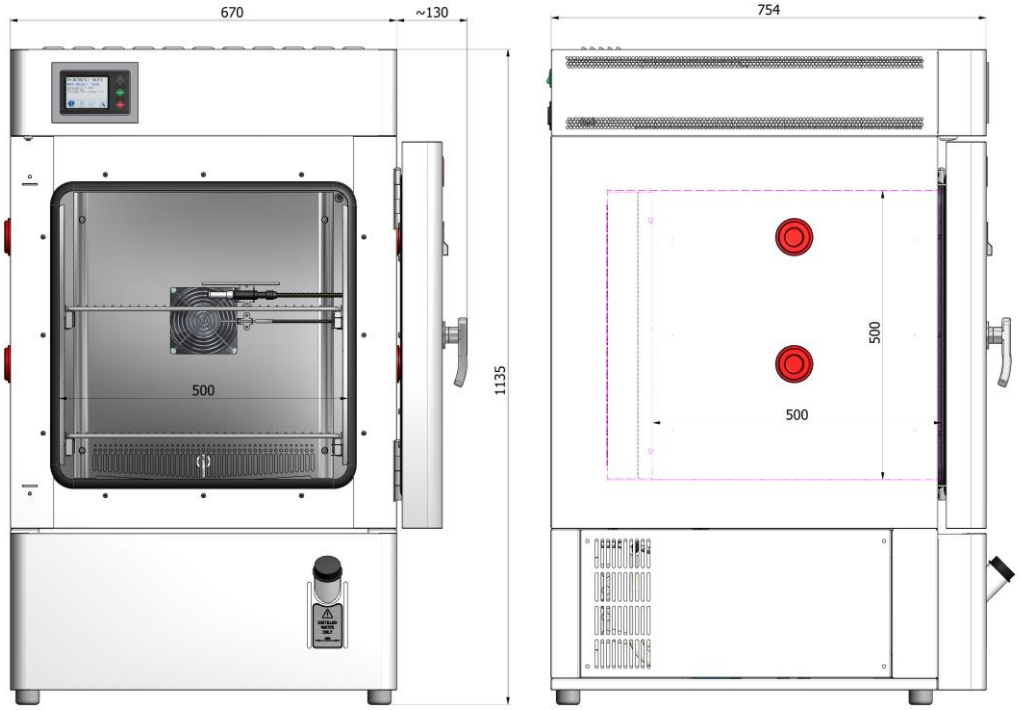

SHIPPING	
W	800 mm
H	1350 mm
D	900 mm
WEIGHT	125 kg

* we reserve the right to modifications

DIMENSIONAL DRAWING	PRODUCT	MODEL
	PELTIER CLIMATIC CHAMBER	PKK-125
		/
		/

Kambic d.o.o. Metliska cesta 16; 8333 Semic ; Slovenia - EU
www.kambicmetrology.com
info@kambicmetrology.com