Short Form Data Sheet

C-Series PRESSURE

BETA products are manufactured in The Netherlands

Enclosures:

Cast Aluminum:
Oven baked powder coating
hammertone grey

Also available in SS 316

Wheaterproof IP 66 - EN 60529

(Nema 4X)

Repeatablity:
typical 0.2% of Full Scale

Standard unit: Barg

Optional: PSI / Kg / Pa

Standard process connetion:
1/4" NPT F or BSP F

Standard Diaghragm/O-ring:
Buna N / Buna N

For wetted parts:
more possibilities available, see full catalogue

BETA SWITCHES ARE, BUILD TO LAST!

Do you want to know more:

Please contact your local dealer and ask for the General Bulletin. Or contact us directly!

www.beta-b.nl

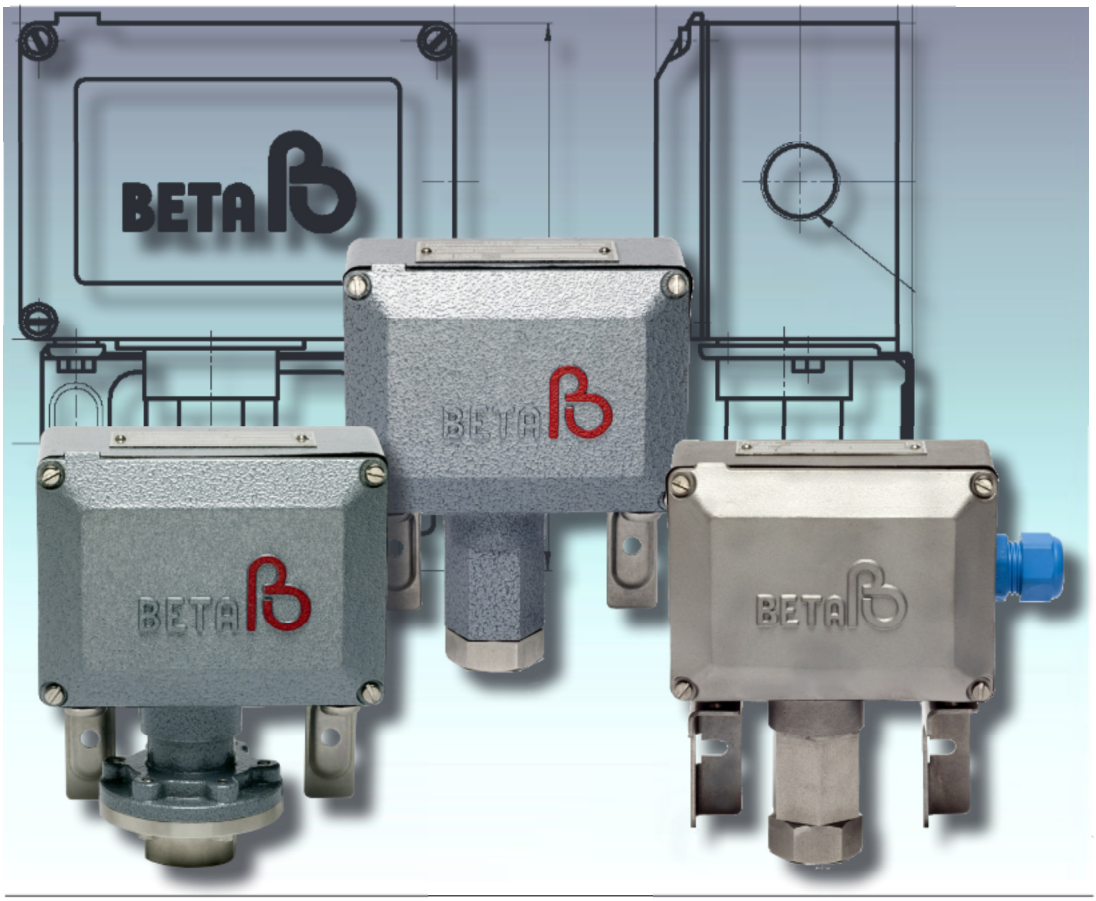

Ranges for Pressure swiches

RANGE CODE	ADJ. RANGE mBar/ Bar	ADJ. RANGE PSI / Inch WC	ADJ. RANGE Kpa/ MPa	ADJ. RANGE Kg/cm2 / mmH2O
P 301 L [1]	2 - 15 mBar	0.8 - 6 InchWC	0.2 - 1.5 kPa	20 - 150 mmH2O
P 302 L [1]	10 - 100 mBar	4 - 39 InchWC	1 - 10 kPa	100 - 1000 mmH2O
P 304 L	20 - 240 mBar	8 - 94 InchWC	2 - 24 kPa	200 - 2400 mmH2O
P 306 L	20 - 560 mBar	8 - 220 InchWC	2 - 56 kPa	200 - 5600 mmH2O
P 308 L	25 - 1300 mBar	10 - 510 InchWC	2.5 - 130 kPa	250 - 13000 mmH2O
P 402 M	100 - 400 mBar	1.5 - 5.8 PSI	10 - 40 kPa	0.1 - 0.41 Kg/cm2
P 404 M	100 - 950 mBar	1.5 - 14 PSI	10 - 95 kPa	0.1 - 0.97 Kg/cm2
P 406 M	120 - 2300 mBar	1.7 - 33 PSI	12 - 230 kPa	0.12 - 2.3 Kg/cm2
P 408 M	150 - 5400 mBar	2.1 - 78 PSI	15 - 540 kPa	0.15 - 5.45 Kg/cm2
P 502 H	0.3 - 1.6 Bar	4.4 - 23 PSI	0.03 - 0.16 MPa	0.3 - 1.60 Kg/cm2
P 504 H	0.4 - 3.5 Bar	5.8 - 51 PSI	0.04 - 0.35 MPa	0.4 - 3.5 Kg/cm2
P 506 H	0.5 - 9.0 Bar	7.3 - 130 PSI	0.05 - 0.9 MPa	0.5 - 9.2 Kg/cm2
P 508 H	0.7 - 21.5 Bar	10 - 310 PSI	0.07 - 2.15 MPa	0.7 - 22 Kg/cm2
P 706 H	2.5 - 32 Bar	36 - 464 PSI	0.25 - 3.2 MPa	2.5 - 33 Kg/cm2
P 708 H	3.0 - 76 Bar	44 - 1100 PSI	0.3 - 7.6 MPa	3.1 - 77 Kg/cm2
P 808 H	4.0 - 170 Bar	58 - 2500 PSI	0.4 - 17 MPa	4 - 170 Kg/cm2
P 908 H	10 - 300 Bar	150 - 4400 PSI	1 - 30 MPa	10 - 310 Kg/cm2
P 909 H	10 - 350 Bar	150 - 5100 PSI	1 - 35 MPa	10 - 360 Kg/cm2

[1]) Only available with L1 -microswitch element. K1 possible consult factory).

Disclaimer: We reserve the right to make changes or modify the contents of this document without pior notice. BETA B.V. does not accept any liability or claim whatsoever for potential errors, incorrect interpretation or possible lack of information in this document. It is clearly and only intended as coarse and general information of our products.

More Short Form Data Sheets on Vacuum, Differential and Temperature Switches are available.

Doc. no.: SP 400/13/07/5K-(FC)

BETA PRESSURE & TEMPERATURE SWITCHES

C-Series

Short Form Data Sheet

PRESSURE

Making the modelcode: Follow steps 1 to 5

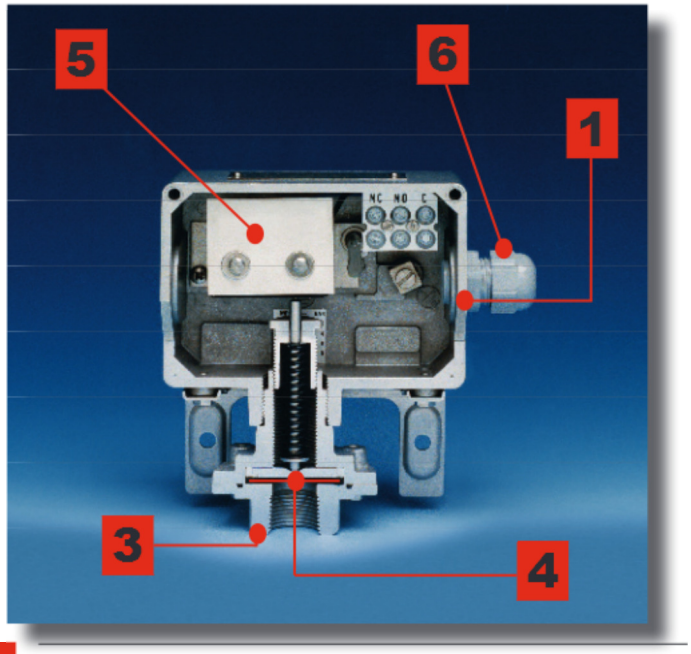

1 Selection of enclosure type.

Conduit	Material	Enclosure code
Pg13.5	Aluminium	C1
M20x1.5	Aluminium	C2
3/4" NPT F	Aluminium	C3
1/2" NPT F	Aluminium	C4
M20x1.5	SS 316	C8
Other/ Specials	Aluminium	CX
	SS 316	CX

2 Selection of range code, see front page

3 Selection of process connection.

Size	Material	Code
1/4"NPT F	Aluminium *	A1N
1/2"NPT F	Aluminium *	A2N
1/4"NPT F	SS316	S1N
1/2"NPT F	SS316	S2N
1/2"NPT M	SS316	S7N

* Aluminum only, std on P..L. - **Not available** on other ranges.

Above standard process connections are also available in:**"BSP"**
For example: 1/2" BSP F (3316) = **S2B**

Process connections are also available in other materials like, Monel, PVC, Hastolley, Titanium etc.

4 Selection of wetted parts*

Diaphragm	O-ring	Code
Buna N	Buna N	B1
Viton	Viton	V2
SS316	Buna N	S1
SS316	Viton	S2
SS316	Teflon	S4
SS316	EPDM	S6
SS316	Welded	S0

* **WETTED PARTS ARE NOT GUARANTEED,**
against corrosion or permeation since processes vary from plant to plant and concentration of harmful fluids, gasses or solids vary from time to time in a given process. Empirical experience by users should be the final guide and alternate materials based on this are generally available.
The diaphragm / O-Ring combinations are for process temperatures of -5°C to +90°C, unless otherwise indicated. For process temperatures beyond these limits please contact your BETA Switch Representative

5 Selection of microswitches

Rating VAC.	Rating VDC. 3)	Use:	Switch Code: 1)
480/ 15A	28/ 0.5A	**Standard**	K1 2)
480/ 10A	28/ 0.5A	Standaard for L-serie	L1 2)
480/ 15A	125/ 0.5A	Normal DC-service	U1
125/ 1A	28/ 0.5A	For use in H_2S environment and/or for (EEx)i applications. 3)	Y1
250/ 0.1A	30/ 0.1A		G1 **
250/ 0.1A	30/ 0.1A	Environmental proof(IP 67)	O1
250/ 2A	30/ 2A		N1

1) For D.P.D.T action, second code figure schould be specifeid as **"2"**
For example: K1 = S.P.D.T./ **K2** = D.P.D.T

2) VDE certified acc. to DIN EN 61 058-1:1992+A1:1993.

3) Indicated ratings are for resistive DC load only.

** DC Rating not U.L. listed, although experience and third party testing confirm the D.C Voltage ratings. Consult your local BETA switch Representative.

6 Selection of options

Description	Option code
Cable gland	C
Intrinsically Safe Application (EEX i)	I
Vacuum Protection Plate	M

Accessoires:

2" Pipe mount bracket set available.

Contents :
2 x bolts M6 x 100 mm + washer + nut
Size +/- 1,5 mm / Material SS 304

For extended selection and/ or speci¿ed technical information, please ask for the "BETA User Friendly" Catalogue.

Doc. no.: SP 400/13/07/5K-(FC)